CHECKOUT CONTROLLER

Mv7n

Table of contents	2
General informations	3
Pre-installation information	4
Mounting dimensions	5,6
Parameters	7
Conditions of use	8
Controller connections	9,10
Panel description	11
Operating the controller during operation	12,13
Solving problems	14
Guarantee card and terms	15

Controller MV7n - general information

This controller is designed for automatic and manual operation with one conveyor belt.

Automatic mode: photocells, built-in checkout, send signals to the controller.
Every time when a good (object) is in the range of photocells, the belt is stopped.

Basic parameters:
- main switch
- automatic operationwith the use of a photocell
- automatic stop of the empty conveyor belt
- automatic stop of the conveyor belt in case of prolonged lack of signal from the photocell
- the possibility of controlling the conveyor belt by using a footswitch
- output for lighting of a chceckout
- output for signal light (costant or pulse)
- emergency switch
- double protection of the motor output

Supported types of chceckout:

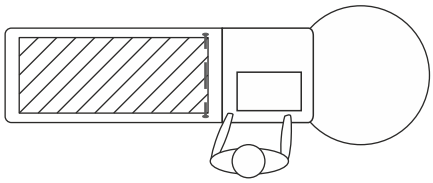

Single with one belt.

The following must be strictly observed!

It is built-in device and does not work independently. It is the responsibility of the manufacturer - constructor of the final product to provide adequate protection against shock, in accordance with the standards applicable to the final product. The controller is designer for checkouts, which are subject to the requirements of EN 60204-1.

Therefore, it should be remembered that the checkout box is subject to this standard and the controller is one of the electrical components of the whole machine. The design of the checkout box should be made in accordance with the requirements of safety standards and not cause a risk to the user. The user of the controller may only access the front part used to operate the controller. Access to the rest, especially the electrical parts and cabling, can be possible with tools. The controller should be permanently attached to the surface of the device in which it is mounted, and its disassembly is possible only with tools. Controller wires and moving parts of the device such as the motor, belt and others shall be secured in such a way that they cannot be damaged and come into direct contact with the operator. The cabling shall be fixed in such a way that the plugs cannot be pulled out of the connectors on the control board, in accordance with safety rules (it must not be tangled or strained). The individual conductors of the cable should be insulated, tinned or clamped in the sleeve end as shown. Outputs of lamp circuits on the controller board are used to connect signaling lamps. Wires for signal lamps, led from the controller, should be in the second insulation class and installed in such a way that they cannot be damaged during the use of the device. The lighting lamps of the station should be out of reach of the operator.

The controller as a machine component and the supply terminals of the controller are not adapted and are not used to connect the main connection cable. The protective ground clamp in the controller is one of the elements of the protective circuit connections and cannot be used as the main protective ground clamp. The controller protect the motor circuit against short circuit by means of the main fuse. If there is a short circuit in the motor circuit, the main fuse will be burn out and the controller will switch off. The controller's fuse is used to prevent the device from escaping an internal emergency situation such as a short circuit or overload. It is allowed to apply additional protections on the output circuits of the controller. A properly selected overcurrent protection, indicated by the motor manufacturer, can be used as motor overload protection.

It is recommended to use motors equipped with thermal sensors. Some versions of the controller are equipped with thermal motor sensor inputs and can provide additional protection for motors against long term overload and overheating. These sensors can be connected to the appropriate inputs on the controller board described in the manual. The insulation of the wires of any sensor shall at least match the basic insulation.

During the design phase of the device body into which the controller will be mounted, it must be taken into account that liquids and solid objects that would get on the controller from above must not have an effect on the controller. It is recommended to use appropriate housing to eliminate such occurrences.

On the next page we have included basic ways of mounting the controller. We allow for a 90 degree angle of installation. It is important to remember about proper ventilation of the unit and to consider the heat dissipation from the controller during the design phase. A minimum ventilation gap of 15 cm2 must be provided in a closed enclosure. We also recommend a minimum of space for the cabling coming out of the controller.

Mounting dimensions:

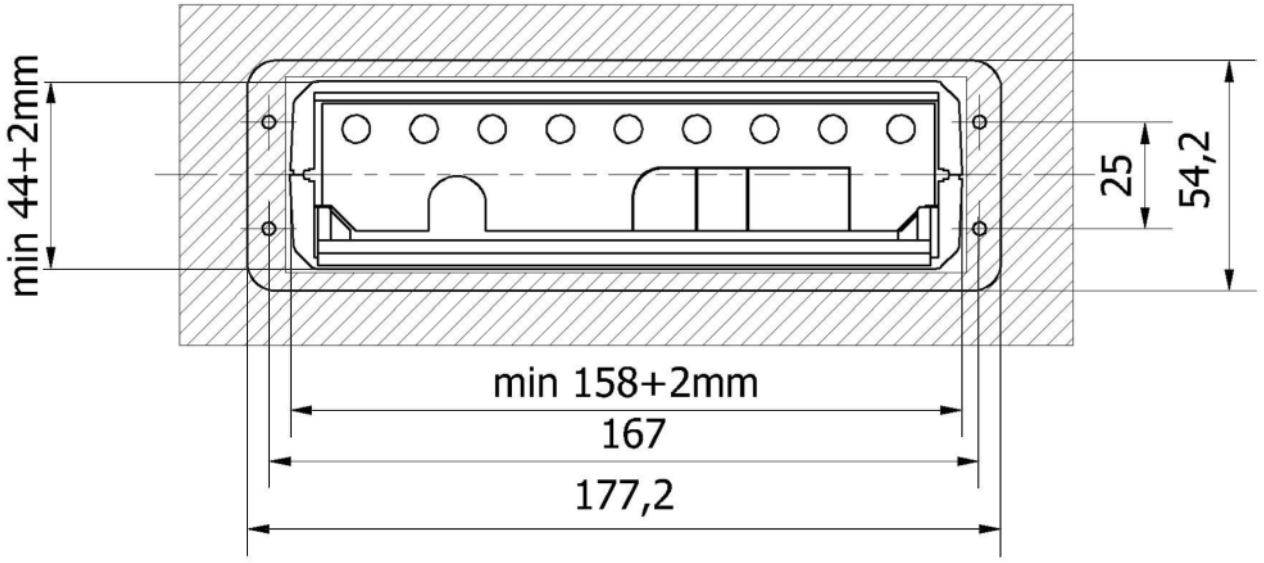

Mounting configurations:

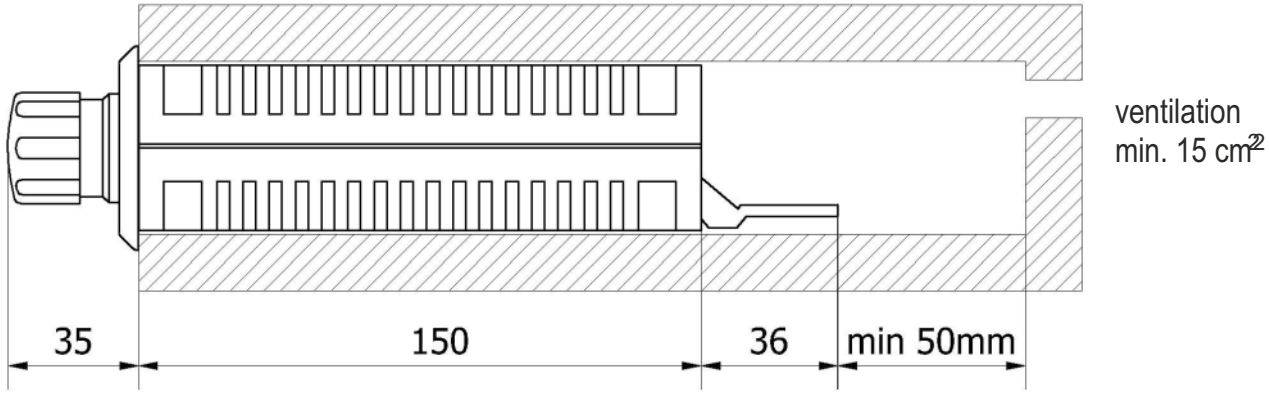

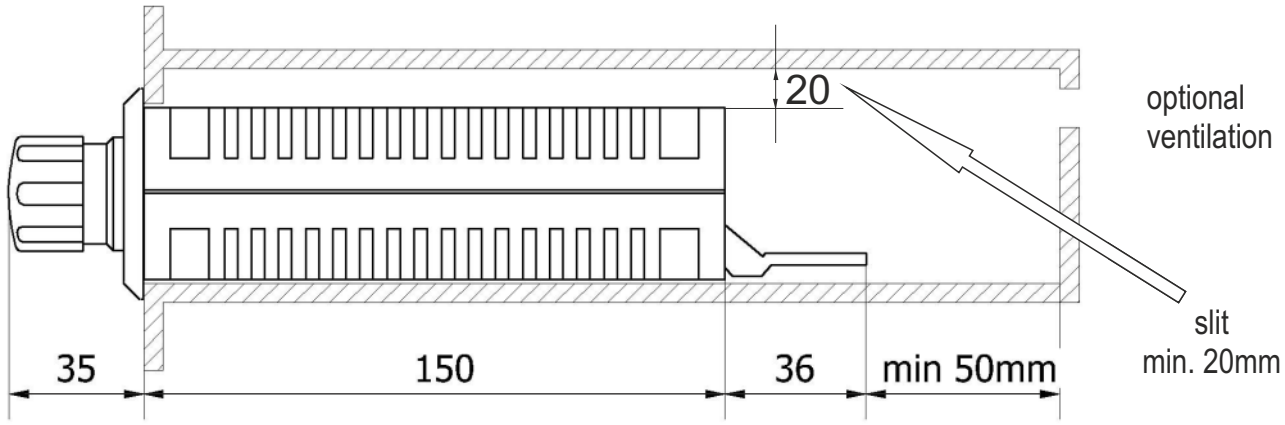

Photocell's mounting:

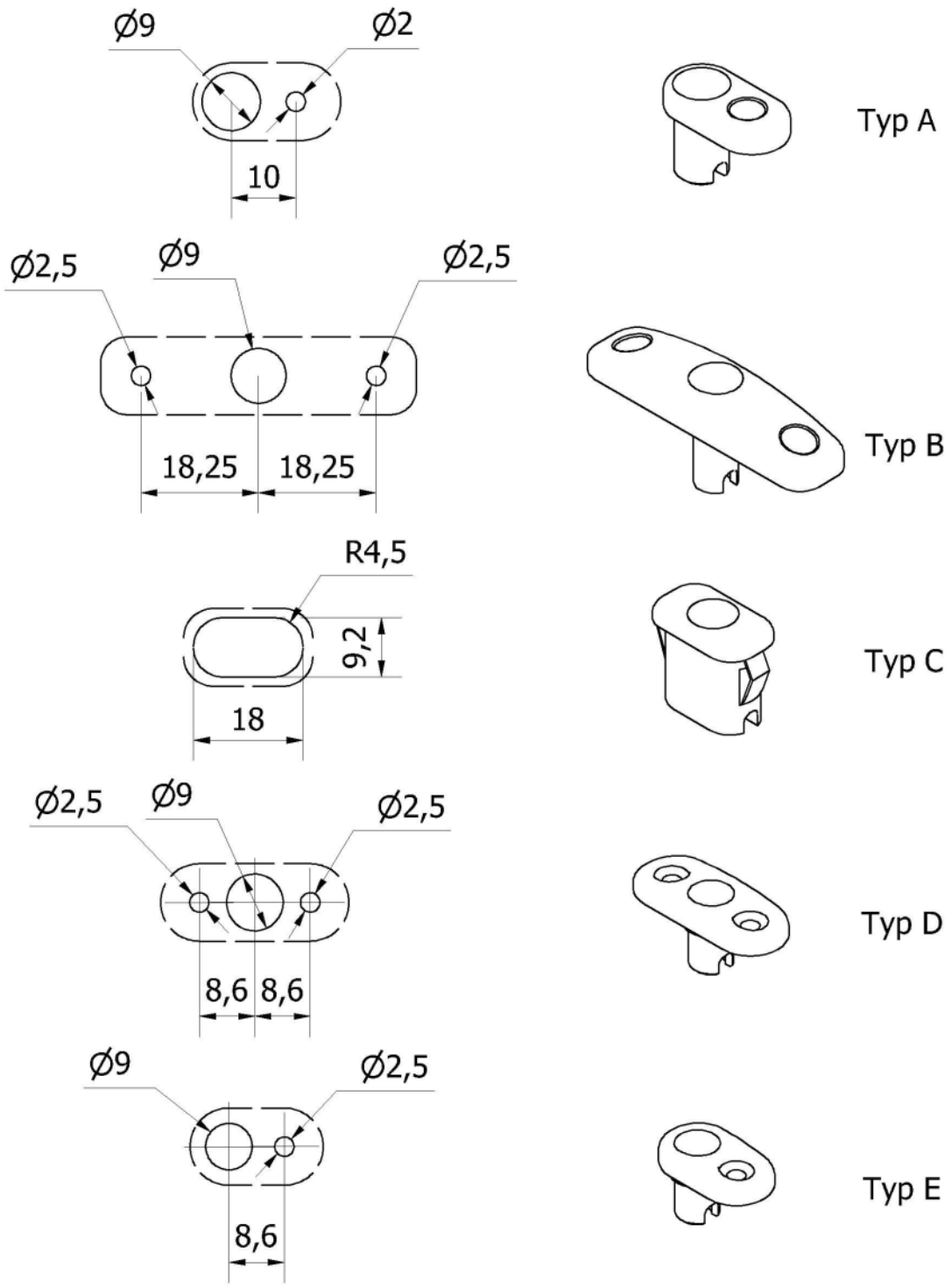

Electrical parameters

Power supply	~220-240V/50Hz
Max.total power consumption:	450VA
Output current of the main belt (~230V/50Hz):	max 1 A
Max. power consumption of an additional circuit L1 :	100 W
Max. power consumption of an additional circuit L2 :	100 W
Power consumption of the control system:	2,5 W
Max. engine power:	200 W

Fuse:

- fuse 4A/250V - main short circuit protection

Photocells

Type:	IR
Wavelenght:	940 nm
Optimum range:	to 700mm
Tolerance of parallel movement of photocells axis:	50mm
Tolerance of perpendicular deviation from photocells axis:	<3 degrees
Standard cable lenght:	2200mm (2,2m)
Connector:	N2 with the lath

Dimensions:	178x55x223mm
Mass:	680g

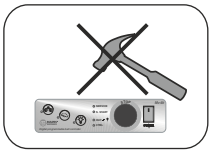

The controller should be used as intended.

Be careful with the water! The machine lives! In case of fire use dry powder extinguisher.

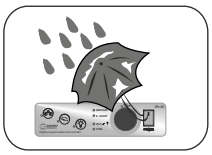

Protect against flooding.

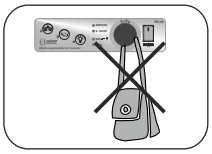

Do not hang bags and other items.

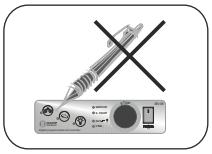

Do not push the buttons with sharp tools.

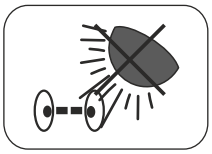

Do not expose the photocell directly to the sun or other strong light.

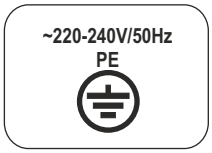

Power supply current ~ 220-240V/50Hz with the protective ground. Connecting only with the PE guard wire.

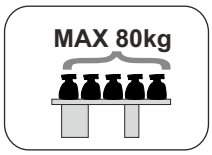

The total conveyor belt surface load must not exceed 80kg.

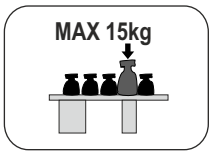

Weight of a single weight belt can not exceed 15kg.

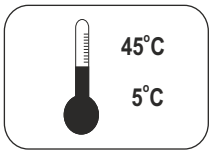

Ambient temperature required for proper operation of the controller ranges from 5 ° to 45 °.

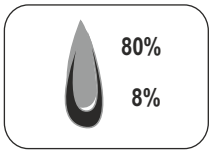

Humidity required for proper operation of the controller ranges from 8% to 80%.

The cashier counter can be connected only by an authorized person.

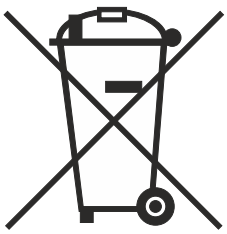

WARNING!!! Information concerning the designation and collection of waste electrical and electronic equipment.

The symbol placed on the product or its packaging indicates selective collection of electrical and electronic waste equipment. This means that the product should not be disposed with other household waste. Proper disposal of old and waste electrical and electronic equipment will help to prevent potential negative effects on the environment and human health. The obligation for selective collection of used equipment is the user's duty, who should give it to the collector of used equipment.

Controller MV7n - Connections

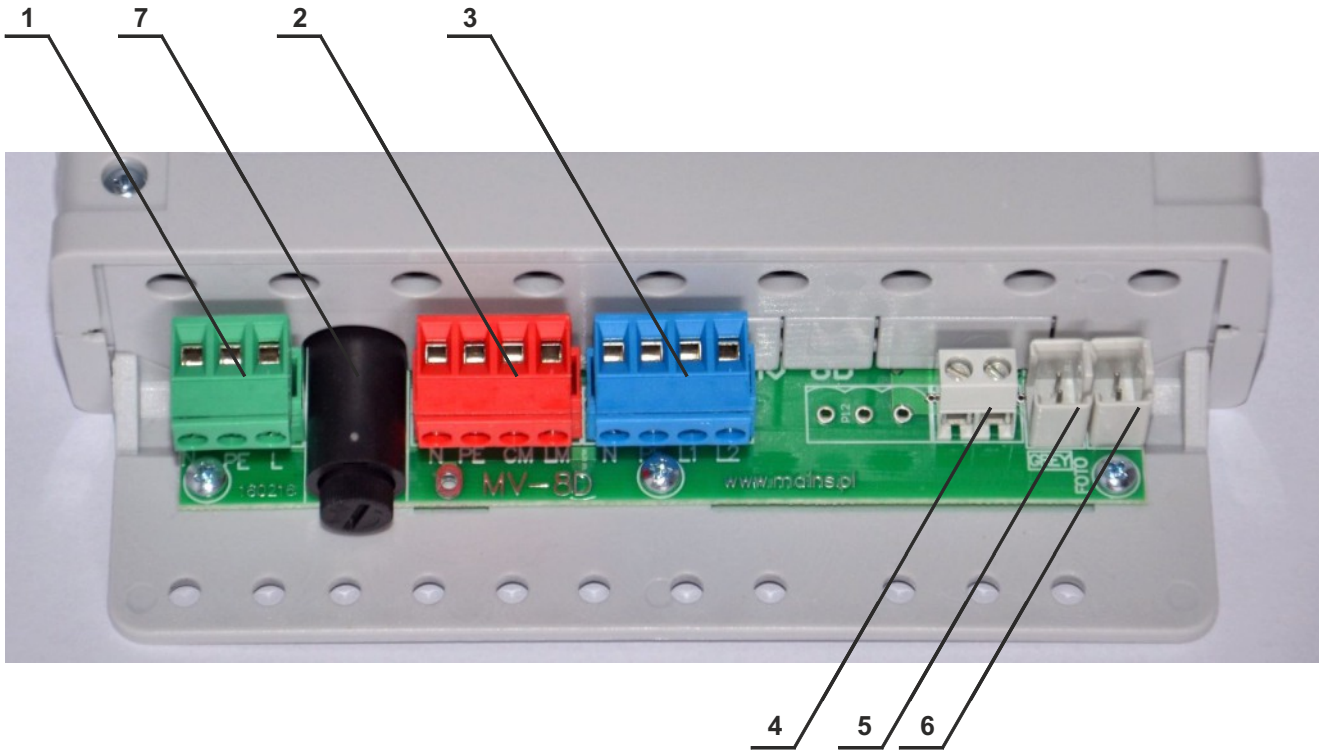

Description of connectors :

1. Power supply of the controller (X1)
   - L – power cable
   - PE – protective cable
   - N – neutral cable
2. Power supply of the mtor (X2)
   - LM – phase cable of the motor power supply
   - CM– capacitor phase cable of the motor power supply
   - PE – protective cable of the motor
   - N – neutral cable of the motor power supply
3. Power supply of the additional circuit (X23)
   - L2 – phase cable of the second lamp
   - L1 – phase cable of the first lamp
   - PE – protective cable of the motor
   - N – neutral cable of the both lamps
4. Footswitch connector, NO contact-type
5. Photocell MAINS - transmiter (grey cable)
6. Photocell MAINS - receiver (black cable)
7. Fuse 4A/230V – main short circuit protection

Controller Mv7n - Connections

Attention!

In the figure the correct connection and the attachment of wires to the controller's housing are illustrated.
The connected cables should be fastened to the device's housing in order to prevent the connectors from pulling out.
The particular wires should be isolated, tinned or crimped with the use of insulated ferrule (as shown).
This solution protects against accidental short circuit and damage of the controller.

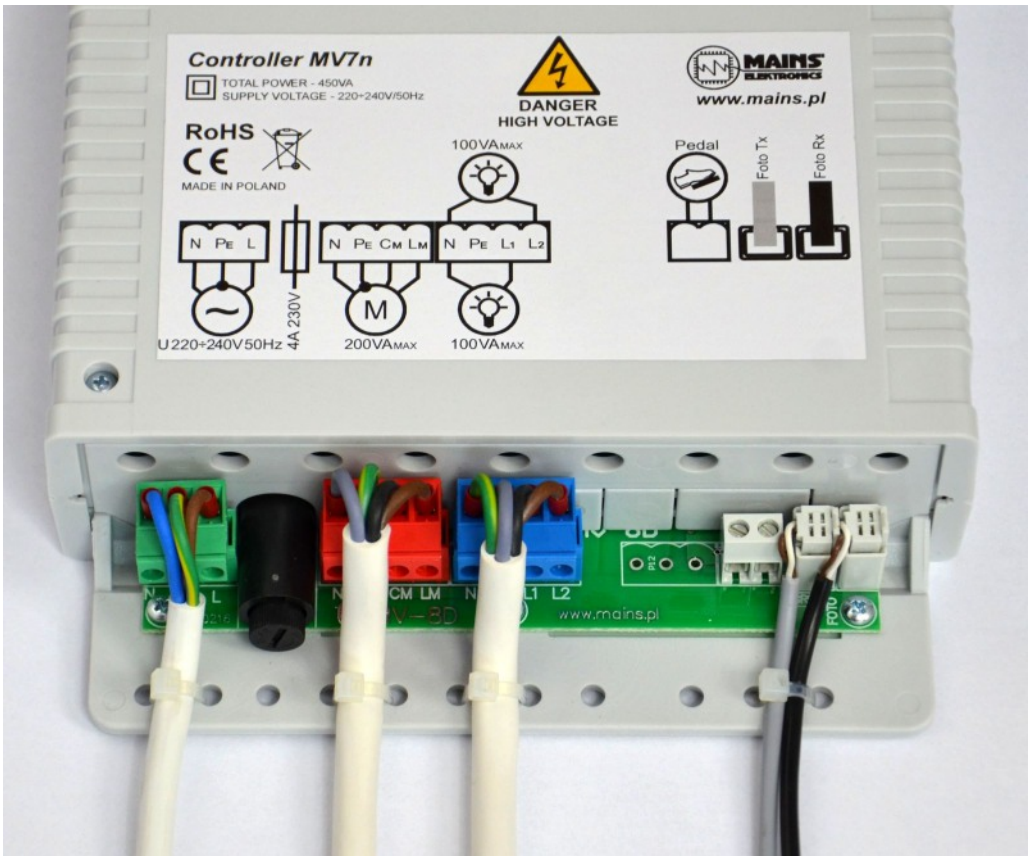

Accessories

The additional accessories such as footswitches can be connected to the controller.

Footswitches

Controller MV7n - panel description

Front panel of the MV7n

Buttons:

1. Turning the L1 circuit ON (the first pressing - continuous signal L1, the second pressing - intermittent signal L1)

2. Turning ON/OFF the automatic operation with the use of photocells

Indicator LED's:

3. OPERATING PERMIT LED – indicates stand-by of the conveyor belt (operating permit ON - LED lights up, motor operation - LED pulsates)

4. LAMP LED - indicates the lighting of the lamp 1 and the kind of signal (constant or pulse)

Switches:

5. Emergency switch - disconnects the power supply

6. Main switch - turns ON the power of the controller and the circuit L2

STOP – emergency switch. In case of any emergency the button [5] must be pressed.
It immediately disconnect yhe power supply and stops the motor.
This function must be used only in emergency situation.

Controller MV7n - handling

Turning the controller ON:

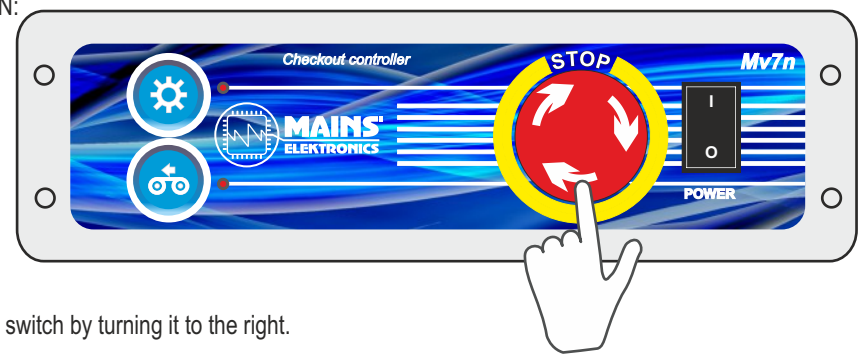

Release the emergency switch by turning it to the right.

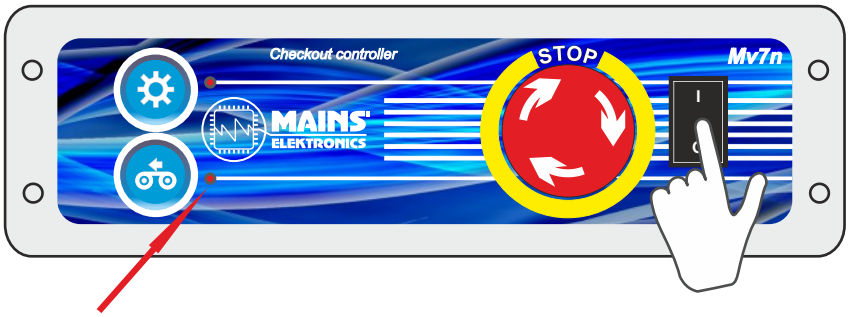

Press main switch [6] to the upper position.

If the conveyor belt in range of photocells is empty.

Turning the conveyor belt ON

-- Controller is ON

- Press the key [2], the operating permit LED will light up. The conveyor belt will work in the automatic mode with the use of the photocells.
- The first start of the conveyor belt is gained through covering and revealing the photocell with the use of any object – the conveyor belt stops automatically when the photocell is covered, then starts after revealing it.
- In case of covered photocell (or in case of lack of signal from it), there is the possibility of moving the conveyor belt by using the footswitch.
- If the conveyor belt is empty, the controller will stop the belt after 12 seconds.

Controller MV7n - Handling

Moving the conveyor belt by using the footswitch:

In case of covered photocells or if the photocells are not connected, the conveyor belt is working according to the signals.
Pressing the footswitch causes start of the conveyor belt, releasing the footswitch causes stop of the conveyor belt.

Turning the L1 circuit ON:

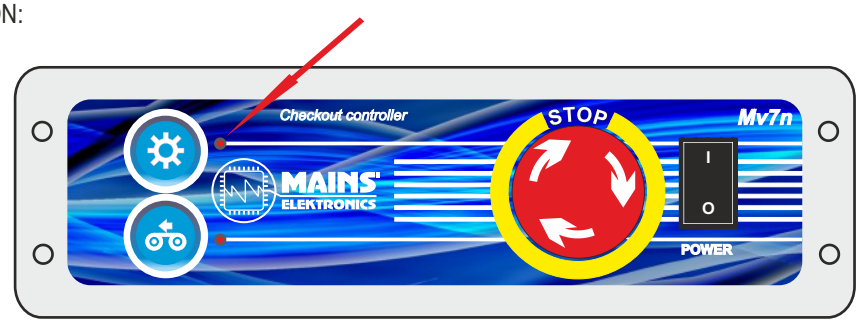

Controller is ON, by pressing the key with the “lamp” symbol the circuit is ON or OFF.
It is indicated by the LED near the key:
- the first pressing turns the constant light ON,
- the second pressing turns the flashing light ON,
- the third pressing turns the light OFF.

The controller MV7n is available in two versions:

With emergency switch:

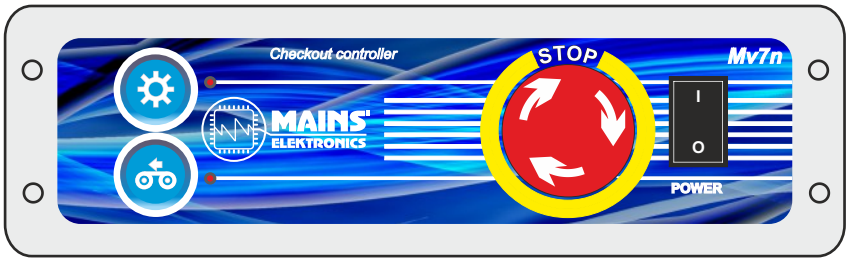

Without emergency switch:
- Installation of the emergency switch in the checkout counter is necessary!

Solving problems

Prior to diagnostic actions one should ensure that:

1. The controller is properly connected and powered on.
2. The emergency switch was released.
3. The main switch is ON (the operating permit LED blinks).

Problem: Conveyor belt does not work.

a) Conveyor belt does not work in the automatic mode with the use of the photocells
- check whether the photocells are not dirty,
- check whether the photocells are not illuminated by daylight or strong artificial light, ensure proper lighting conditions,
- check whether the operating permit LED blinks after covering the photocells – if not, call the customer service.

b) Conveyor belt does not work in the manual mode with the use of the footswitch
- check whether the footswitch is properly connected to the controller.

GUARANTEE CARD

pieczątka sprzedawcy

Checkout controller type: **MV7n**

serial number:_____

Date of purchase _____

The warranty terms:

1. The Seller grants warranty for correct functioning of the Goods for the period 24 months.
2. The warranty extends from the date of transfer of the warranty card to the Buyer. The warranty period shall be specified in description of each Goods.
3. Defects revealed within the warranty period shall be removed free of charge not later than 14 (Fourteen) working days from the date of delivering the Goods to Seller. The period of warranty shall be extended by the duration of the warranty repair.
4.The Warranty Card shall be deemed as valid if it contains the date of purchase and stamp of the Seller.
5. In order to perform a warranty repair, the Buyer shall deliver the Goods to the point of repair at its own expense. After warranty repair, the Goods shall be shipped to Buyer at the Seller's expense.
6. The Buyer shall deliver the Goods properly protected from damage during transportation.
7. The Buyer shall be liable for any loss of the Goods which occurs during the transportation to the Seller. The Seller undertakes to deliver repaired the Goods to Buyer and shall be liable for any loss of the Goods which occurs during the transportation to the Buyer.
8. During the warranty period, the defective Goods shall be repaired free of charge or replaced with new, defect-free ones.
9. This warranty covers only the defects of the Goods revealed during proper use and manufacturing defects. Outside the scope of the warranty are defects of consumable materials and other additional equipment.
10. This warranty does not cover any defects of the Goods resulting from:
- Repairs, changes or constructive modifications caused by the Buyer or any other unauthorized person
- Mechanical, thermal, chemical or intentional damages of the Goods,
- Inappropriate operating parameters of Goods, other than those specified in the manual,
- Storage and preservation of the Goods and other damages caused by the user,
- Deterioration in quality of the Goods caused by normal wear and tear e.g. abrasion of external coating of product, scratch marks etc.,
- Improper use of the Goods, contrary to their purpose,
- Breach of guarantee seals.
11. The Seller reserves the right to make changes to the product without notifying the user if the changes made do not affect the safety and functionality of use.